// FEATURES

- The FORTLOX Key is used for identification in the FORTLOX series and can also be used as an identification medium for our digital locking cylinders, SmartHandles and SmartRelays in System 3060.
- A version with an integrated RFID inlay also enables passive communication via MIFARE® DESFire®.
- Made in Germany! A given with us.

// TECHNICAL DATA

Housing	black plastic (polyamide)
Dimensions (W x H x T)	31 x 15 x 73 mm
Weight	32.2 g
Typical read range	:: up to 20-40 cm to cylinder :: up to 40 cm to SmartHandle :: up to 120 cm to SmartRelay
Battery type	CR2450 3V Lithium Quantity: 1
Battery life	up to 100,000 activations or up to five years on standby

Temperature range	-25ºC to +65ºC
Protection rating	IP67
Signalling	None
Time zone groups	100+1
Number of locking devices that can be managed by each Key	256,000
Adjustable validity	more than 10 years
Storage of datasets	:: up to 4 G2 locking systems :: Physical access list with up to 1,000 storable access events
Can be upgraded	Firmware upgradable via BLE

// DIMENSIONS

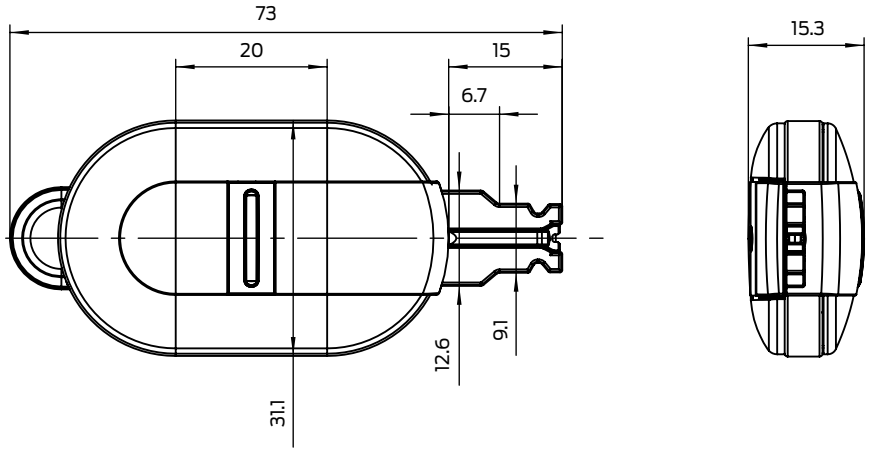

// PRODUCT VERSIONS

Hybrid version with active technology, BLE, single wire in anthracite grey	SV-TRA.G2.ZB.H.GY
Version with RFID inlay, MIFARE® DESFire® EV3 8K	*RF.DESFIRE8K

See price list for further variants, options and accessories.

Measurements indicated in mm

A BRAND OF ALLEGION

Simons Voss technologies